IPM/SCREEN BOTTOM BOARD

SIZED FOR LANGSTROTH BEEHIVE

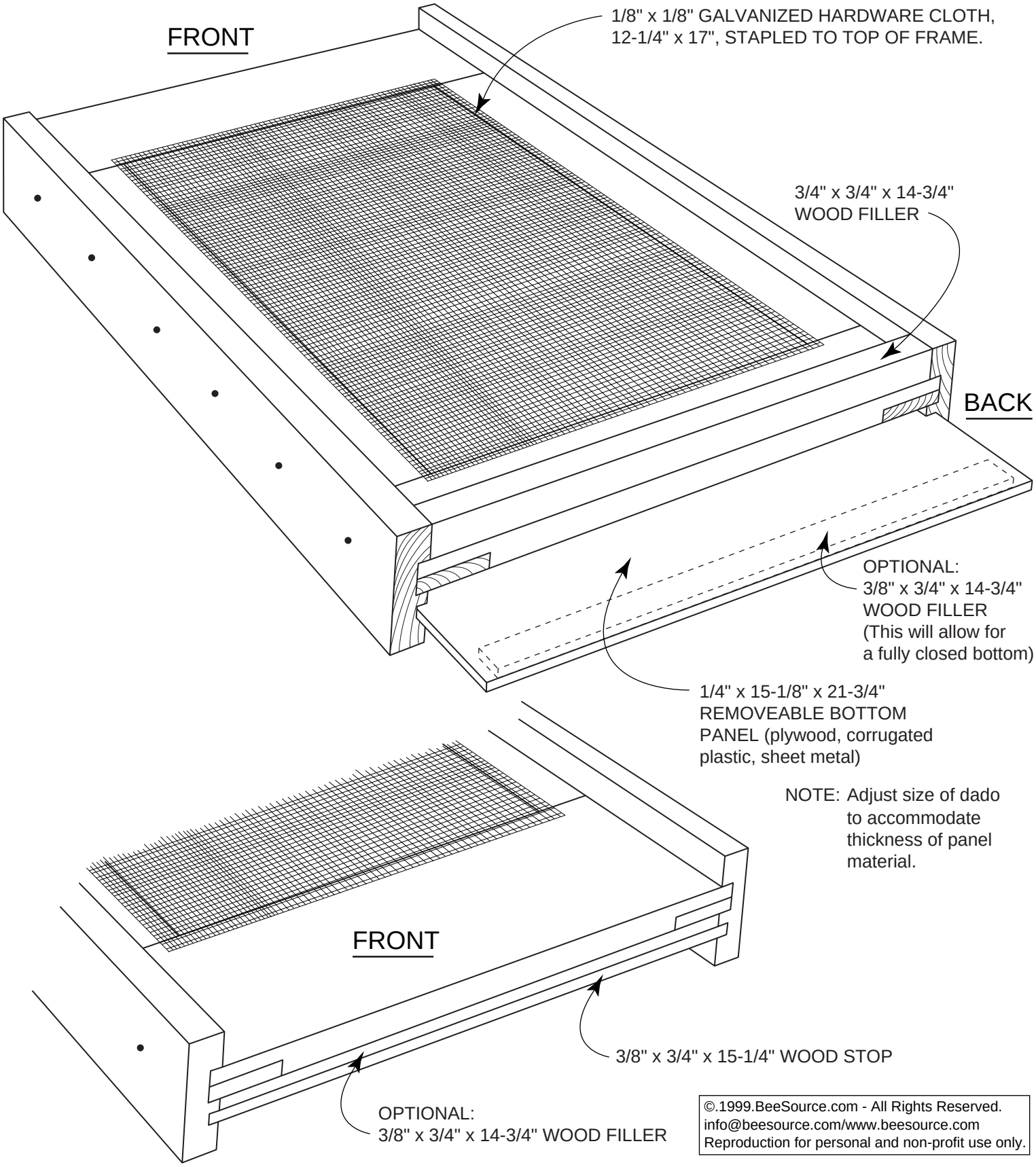

©.1999.BeeSource.com - All Rights Reserved.
info@beesource.com/www.beesource.com
Reproduction for personal and non-profit use only.

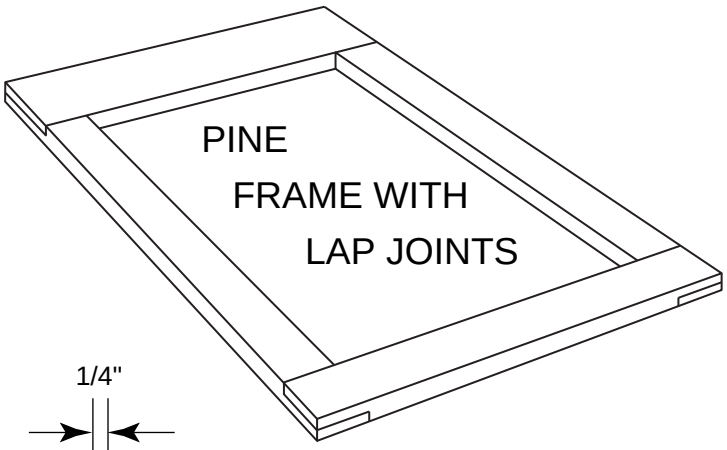

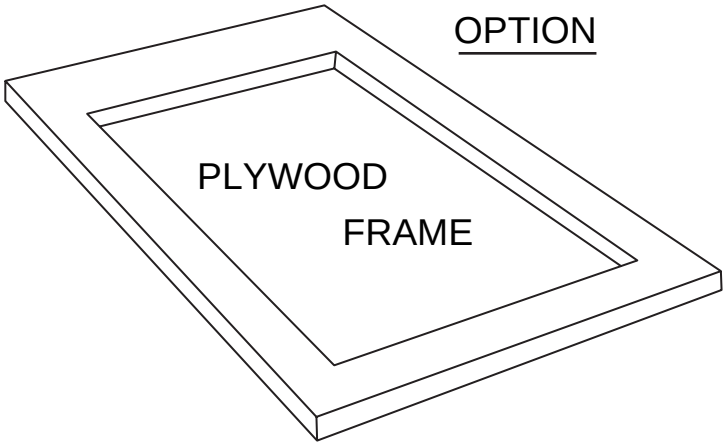

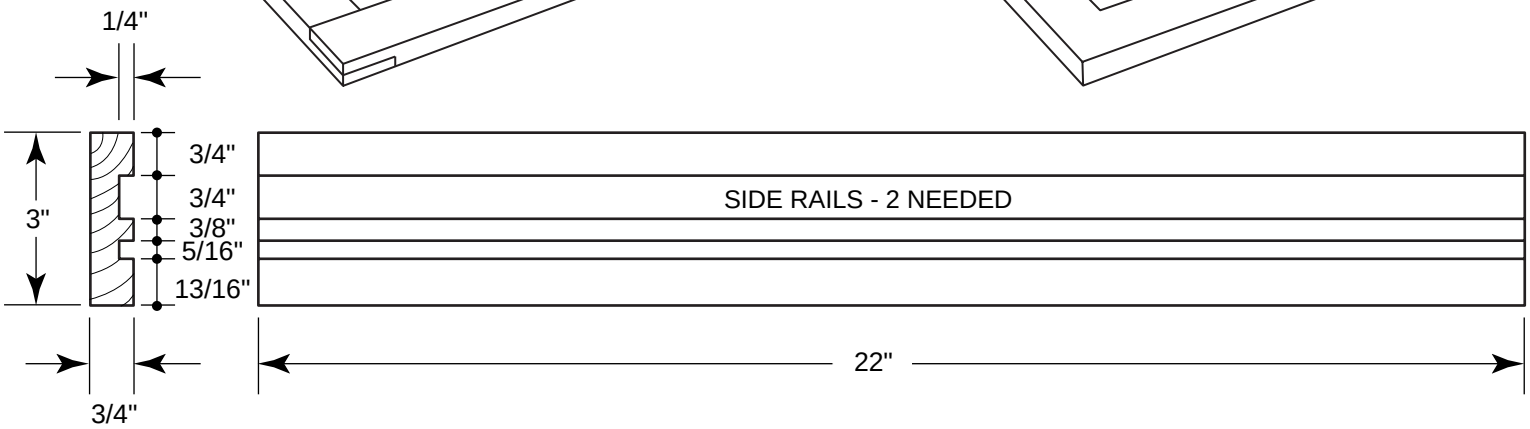

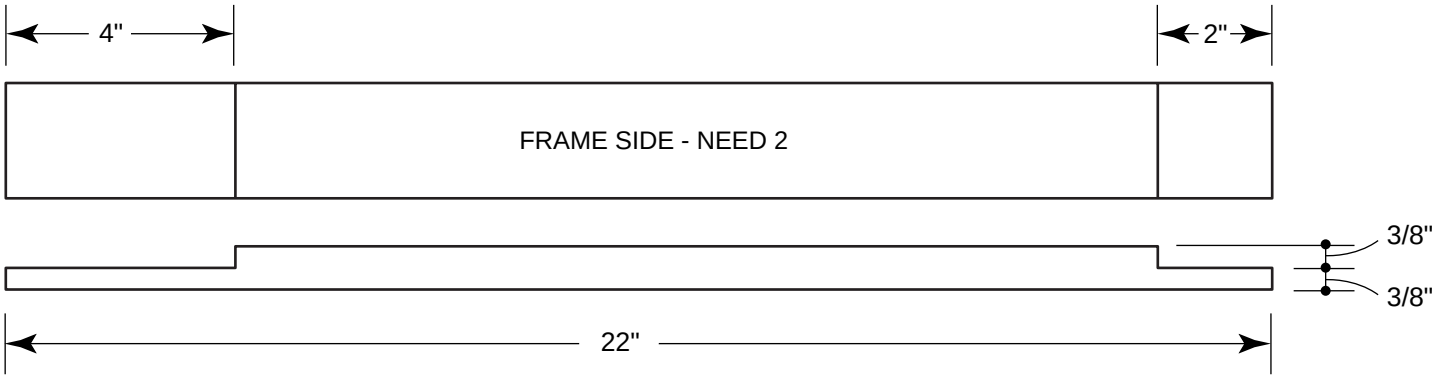

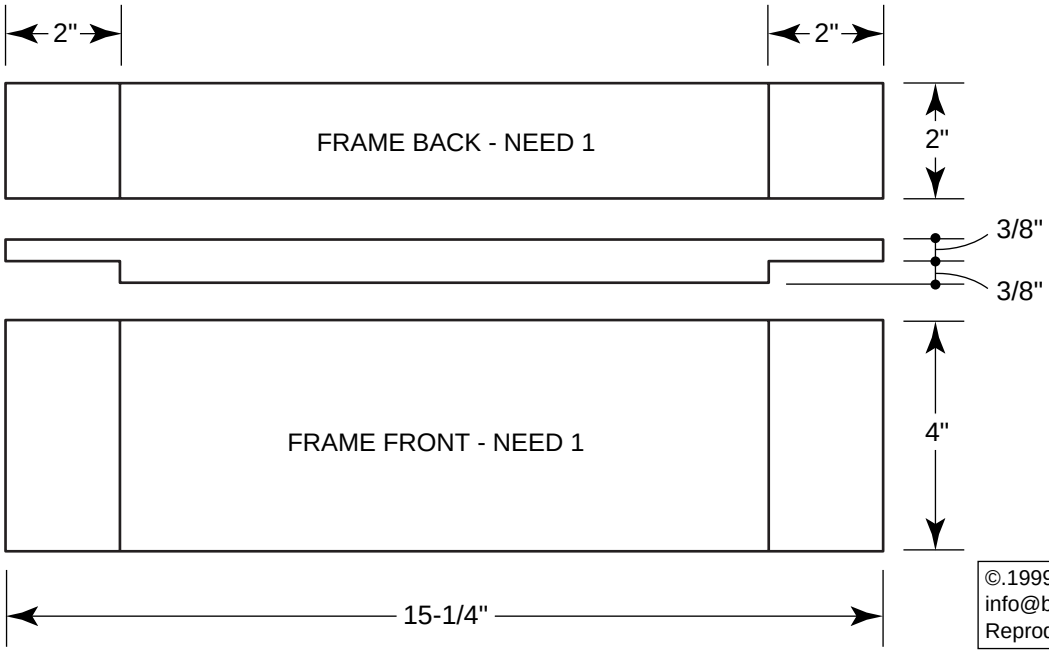

©.1999.BeeSource.com - All Rights Reserved.
info@beesource.com/www.beesource.com
Reproduction for personal and non-profit use only.